No.	DESCRIPTION	MATERIAL
1	STEM	CAST LOW LEAD BRASS ALLOY
2	O-RING	EPDM ASTM D2000
3	BALL	CAST LOW LEAD BRASS ALLOY
4	GASKET - SEAL	NITRILE ASTM D2000
5	BODY	CAST LOW LEAD BRASS ALLOY
6	O-RING	EPDM ASTM D2000
7	END PIECE	CAST LOW LEAD BRASS ALLOY

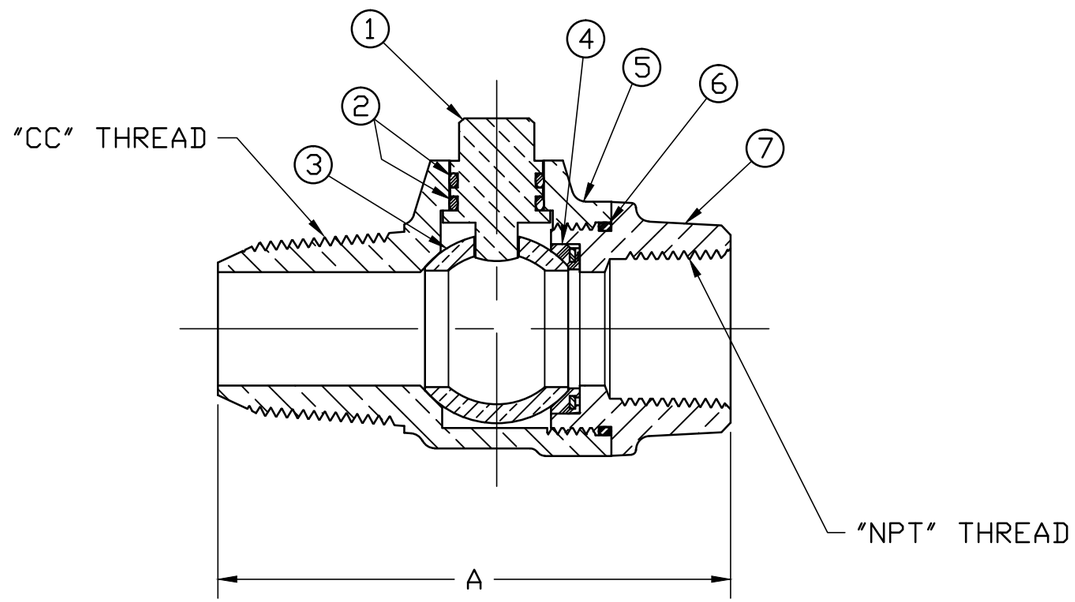

VALVE SIZE	A	NPT SIZE
3/4"	3-25/64"	3/4"
1"	4-7/64"	1"
1-1/2"	4-25/32"	1-1/2"
2"	5-21/64"	2"

ALL WETTED PARTS ARE LOW LEAD BRASS ALLOY

FILEPATH: PROD-ENG\JJ\SUBMITTALS\E1932

REV	ECR	DESCRIPTION	DATE	BY	CHKR

DRFTR	RWB	2/4/10
CHKR		
ENGR		
MGR		
	BY	DATE
STK No:		
MAT'L:		
DESCR.	BALL TYPE LLB CORPORATION VALVE (AWWA TAPER x FIP)	

JONES

UNLESS OTHERWISE NOTED
SURFACE PREPARATION:
BREAK CORNER(S) ---- .000
SURFACE FINISH -- XX RMS
TOLERANCE(S):
LINEAR ---------- ± .000
ANGULAR --------- ± 0°00'

THIRD ANGLE PROJECTION

REF. No.

SCALE

DWG NUMBER E1932

DWG NUMBER E1932

JJ-MRKTG

TITLE TO AND OWNERSHIP OF THIS ENGINEERING DATA REMAINS IN Mueller Co. NO USE IS TO BE MADE OF THIS DATA EXCEPT AS SPECIFICALLY AUTHORIZED BY Mueller Co. ASSENT ON THE PART OF THE RECIPIENT TO THESE CONDITIONS IS PRESUMED