TITLE TO AND OWNERSHIP OF THIS ENGINEERING DATA REMAINS IN Mueller Co. NO USE IS TO BE MADE OF THIS DATA EXCEPT AS SPECIFICALLY AUTHORIZED BY Mueller Co. ASSENT ON THE PART OF THE RECIPIENT TO THESE CONDITIONS IS PRESUMED

ALL WETTED PARTS ARE LOW LEAD BRASS ALLOY

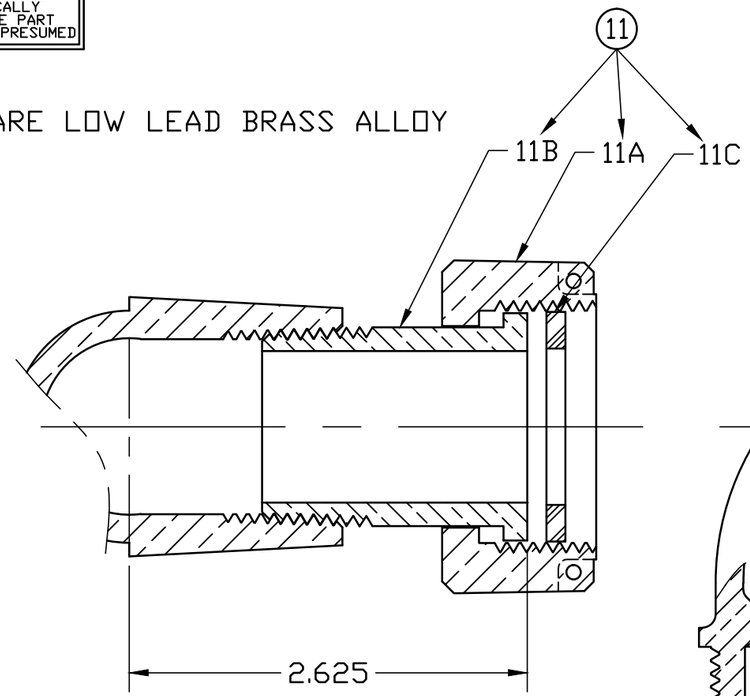


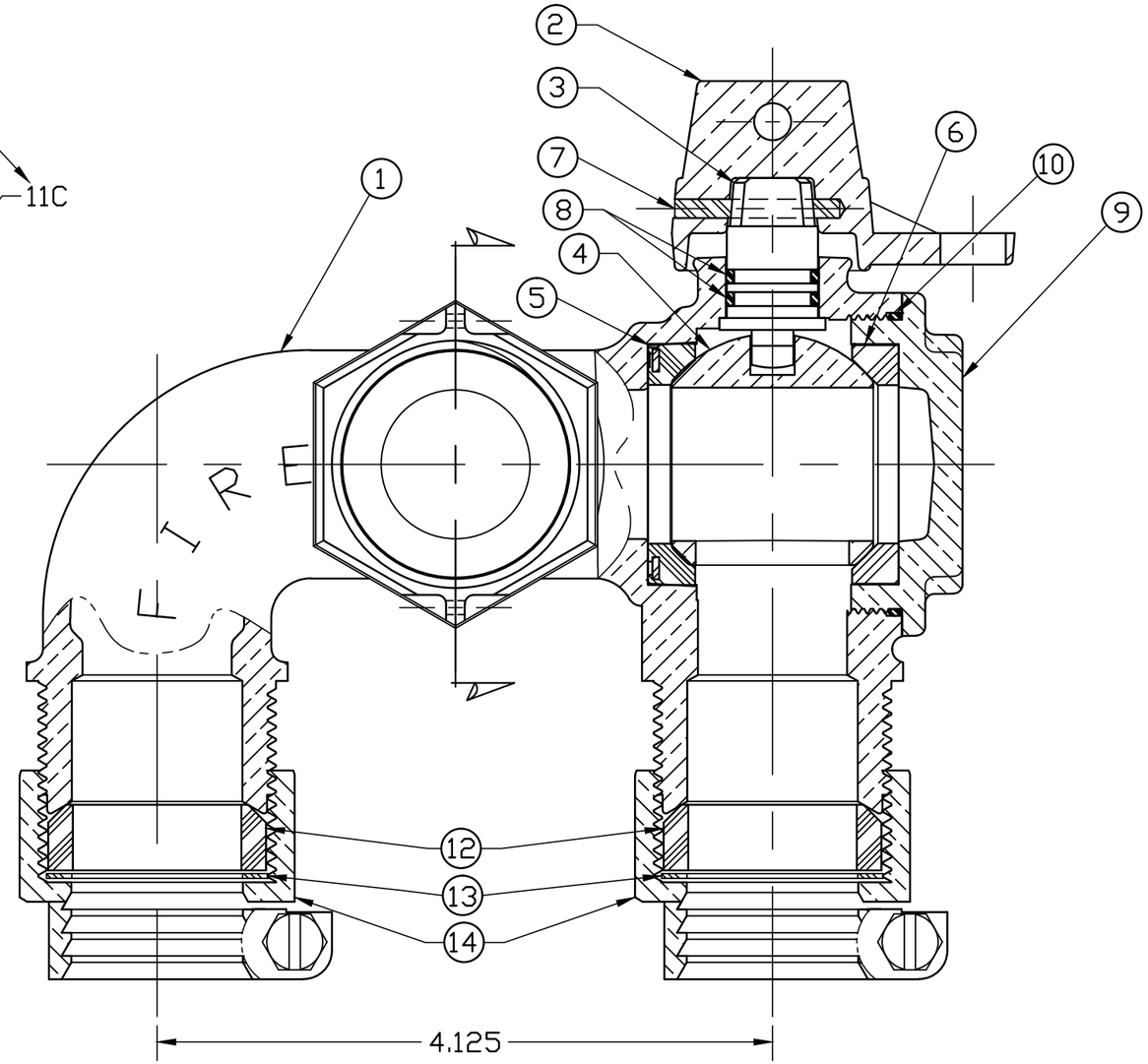


| No. | DESCRIPTION | MATERIAL DESCRIPTION |
|---|---|---|
| 1 | BODY | CAST LOW LEAD BRASS ALLOY |
| 2 | CAP | CAST BRASS ASTM B62 ALLOY C83600 |
| 3 | STEM | LOW LEAD BRASS ALLOY |
| 4 | BALL | LOW LEAD BRASS ALLOY |
| 5 | SEAT (RUBBER) | NITRILE ASTM D2000 |
| 6 | SEAT (DELRIN) | (WHITE) DELRIN |
| 7 | SOLID PIN | AISI 303 STAINLESS STEEL |
| 8 | O-RING | EP ASTM D2000 |
| 9 | END CAP | CAST LOW LEAD BRASS ALLOY |
| 10 | O-RING | EP ASTM D2000 |
| 11 | 1" LLB METER COUPLING | |
| 11A | PLAIN NUT | CAST BRASS ASTM B62 ALLOY C83600 |
| 11B | TAILPIECE | LOW LEAD BRASS ALLOY |
| 11C | RUBBER GSKT | NITRILE ASTM D2000 |
| 12 | COMP GASKET | BUNA N ASTM D2000 |
| 13 | WASHER | POLYPROPYLENE |
| 14 | CLPG NUT SUB | CAST BRASS ASTM B62 ALLOY C83600 |

FILEPATH: PROD-ENG\JJ\SUBMITTALS\E2219

| REV | ECR | DESCRIPTION | DATE | BY | CHKR |
|---|---|---|---|---|---|

| | | |
|---|---|---|
| DRFTR | jGarvin | 2/8/10 |
| CHKR | | |
| ENGR | | |
| MGR | | |
| | BY | DATE |
| STK No: | | |

JONES

UNLESS OTHERWISE NOTED
SURFACE PREPARATION:
BREAK CORNER(S) ---- .000
SURFACE FINISH -- XX RMS
TOLERANCE(S):
LINEAR ---------- ± .000
ANGULAR --------- ± 0°00'

THIRD ANGLE PROJECTION

REF. No. | SCALE

MAT'L:

DESCR. 1" RESIDENTAL LLB FIRE SERVICE VALVE (METER SWIVEL NUT X PJ CTS)

DWG NUMBER E2219